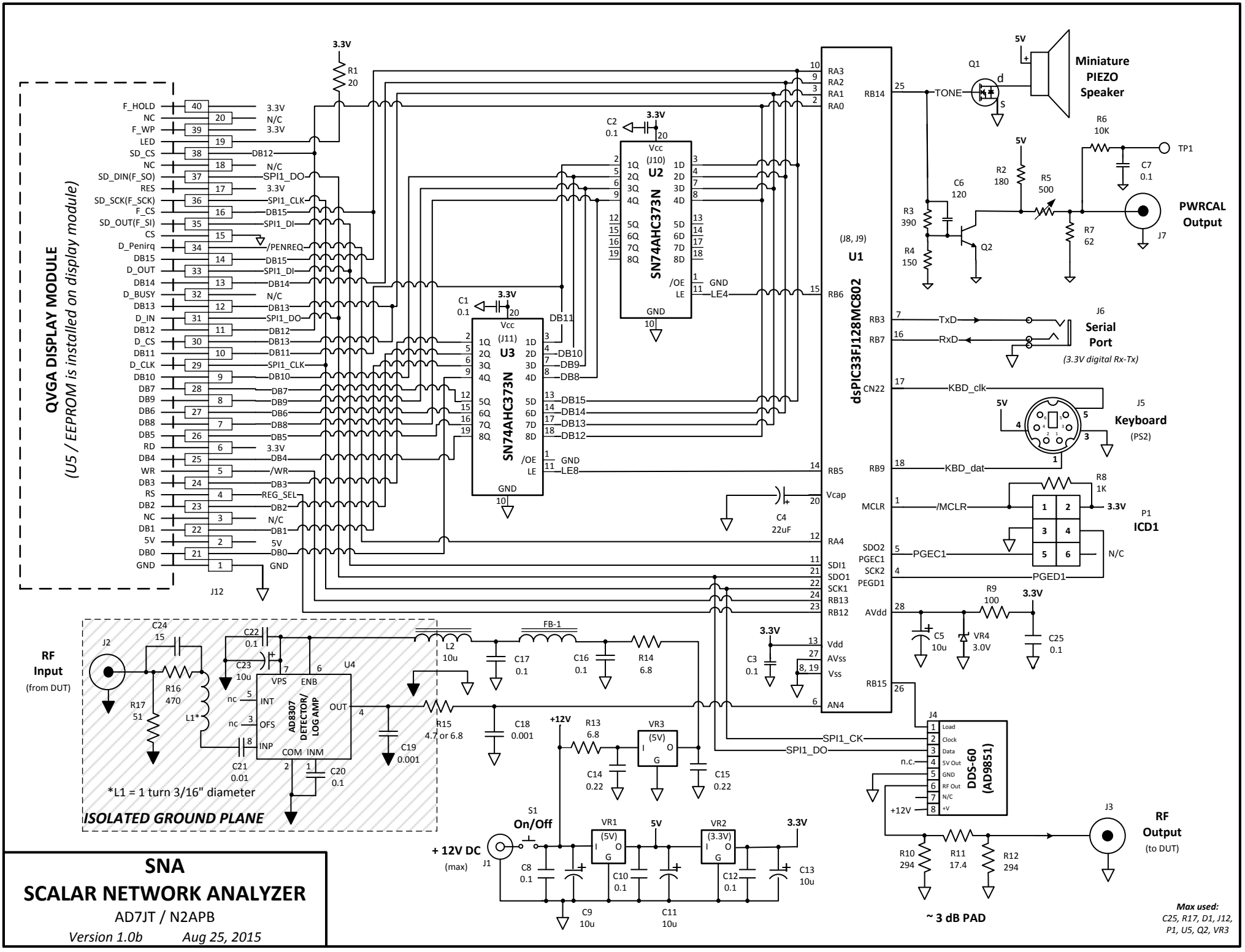
QVGA DISPLAY MODULE
(U5 / EEPROM is installed on display module)
J12
F_HOLD
NC
F_WP
LED
SD_CS
NC
SD_DIN(F_SO)
RES
SD_SCK(F_SCK)
F_CS
SD_OUT(F_SI)
CS
D_Penirq
DB15
D_OUT
DB14
D_BUSY
DB13
D_IN
DB12
D_CS
DB11
D_CLK
DB10
DB7
DB9
DB6
DB8
DB5
RD
DB4
WR
DB3
RS
DB2
NC
DB1
5V
DB0
GND
3.3V
N/C
DB12
SPI1_DO
SPI1_CLK
SPI1_DI
/PENREQ
DB14
DB13
/WR
REG_SEL
DB11
DB10
DB9
DB8
DB15
DB14
DB13
DB12
SN74AHC373N
U2
U3
(J10)
(J11)
Vcc
GND
/OE
LE
LE4
LE8
C1 0.1
C2 0.1
R1 20
U1
(J8, J9)
dsPIC33FJ128MC802
RA3
RA2
RA1
RA0
RB14
RB6
RB3
RB7
CN22
RB9
MCLR
RA4
SDO2
PGEC1
SCK2
PEGD1
SDI1
SDO1
SCK1
RB13
RB12
AVdd
Vdd
AVss
Vss
AN4
RB15
Vcap
C4 22uF
TONE
Q1
Miniature PIEZO Speaker
R6 10K
TP1
C7 0.1
R2 180
R5 500
C6 120
R3 390
R4 150
Q2
R7 62
PWRCAL Output
J7
TxD
RxD
J6
Serial Port
(3.3V digital Rx-Tx)
KBD_clk
KBD_dat
J5
Keyboard
(PS2)
R8 1K
/MCLR
P1
ICD1
PGEC1
PGED1
N/C
R9 100
C5 10u
VR4 3.0V
C25 0.1
C3 0.1
RF Input
(from DUT)
J2
C24 15
C22 0.1
C23 10u
R16 470
R17 51
L1*
U4
AD8307 DETECTOR/ LOG AMP
VPS
ENB
INT
OFS
INP
OUT
COM
INM
C21 0.01
C20 0.1
C19 0.001
L2 10u
FB-1
C17 0.1
C16 0.1
R14 6.8
R15 4.7 or 6.8
C18 0.001
*L1 = 1 turn 3/16" diameter
ISOLATED GROUND PLANE
+12V
R13 6.8
VR3
(5V)
C14 0.22
C15 0.22
SPI1_CK
SPI1_DO
J4
DDS-60 (AD9851)
Load
Clock
Data
5V Out
GND
RF Out
N/C
+V
n.c.
S1
On/Off
+ 12V DC
(max)
J1
C8 0.1
C9 10u
VR1
(5V)
C10 0.1
C11 10u
VR2
(3.3V)
C12 0.1
C13 10u
R10 294
R11 17.4
R12 294
~ 3 dB PAD
J3
RF Output
(to DUT)
SNA
SCALAR NETWORK ANALYZER
AD7JT / N2APB
Version 1.0b Aug 25, 2015
Max used:
C25, R17, D1, J12, P1, U5, Q2, VR3